FIRST ANGLE PROJECTION (ALL DIMENSIONS IN MILLIMETRES)

DRAWING No. 2-80-655-15983

CAUTION THE INFORMATION ON THIS DOCUMENT IS THE PROPERTY OF BHARAT HEAVY ELECTRICALS LTD. IT MUST NOT BE USED DIRECTLY OR INDIRECTLY IN ANY WAY DETRIMENTAL TO THE INTEREST OF THE COMPANY.

05-228/C

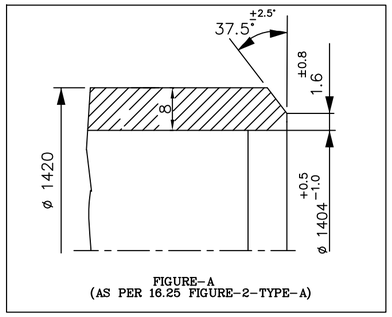

FIGURE-A
(AS PER 16.25 FIGURE-2-TYPE-A)

DETAIL B

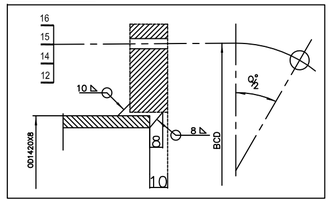

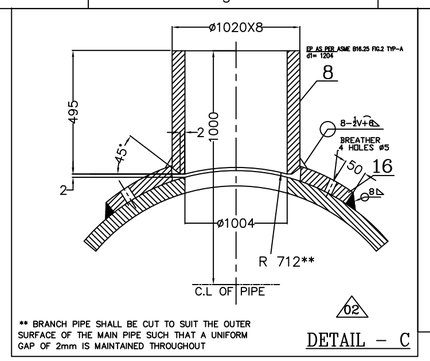

** BRANCH PIPE SHALL BE CUT TO SUIT THE OUTER SURFACE OF THE MAIN PIPE SUCH THAT A UNIFORM GAP OF 2mm IS MAINTAINED THROUGHOUT

DETAIL - C

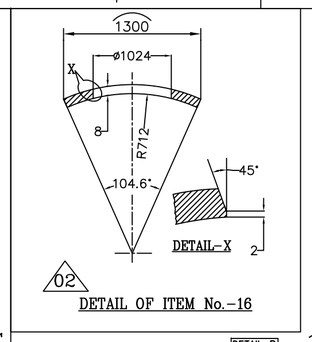

DETAIL OF ITEM No.-16

NOTES: ALL DIMENSIONS ARE IN MILLIMETRES

1. DESIGN PRESSURE - 0.2 KG/CM2 (G) DESIGN TEMPERATURE: 290°C
2. FOR STANDARD NOTES OF PRODUCTION AND ERECTION OF PIPES AND TOLERANCE ON FITTINGS REFER DRG NO. 4-80-001-37654 & 4-80-301-26192
3. FOLLOW APPLICABLE QP AND PAINTING SCHEDULE FOR THE PROJECT
4. ALL UNMARKED BENDS/ELBOWS ARE 90 DEG
5. PIPE ENDS SHALL BE BEVELLED AS PER B16.25 FIG.2 TYPE-A
6. GASKET IS SUPPLIED VIDE 7419-80-733 PGMA.
7. FOR ELECTRODE DATA REFER

PIPE SIZE	MATERIAL SPEC	EP FIG	WELD SPEC	ELECTRODE DATA	
				ROOT RUN	FILLER RUN
OD1420x8	ASTMA516 GR.70	FIG-A	8 V	ER70S-2/ E6010/E6013	ER70S-2/ E7016/E7018

8. THREADS SHALL BE UNIFIED(UNC FOR UPTO 1" DIA) AS PER ASME B1.1 WITH CLASS 2A FIT FOR STUDS AND CLASS 2B FIT FOR NUTS.
9. 01 0 INDICATES WELD AT SHOP.
10. 01 X INDICATES WELD AT SITE.

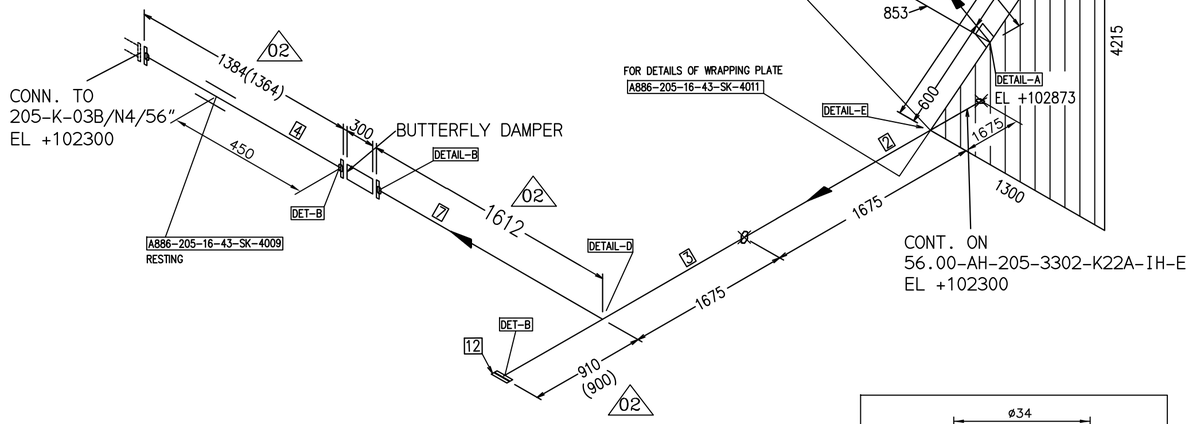

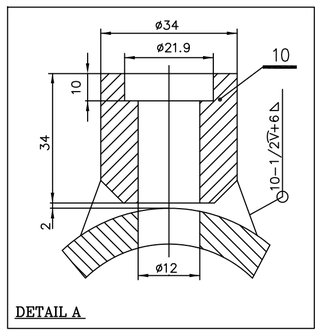

DETAIL A

** BRANCH PIPE SHALL BE CUT TO SUIT THE OUTER SURFACE OF THE MAIN PIPE SUCH THAT A UNIFORM GAP OF 2mm IS MAINTAINED THROUGHOUT

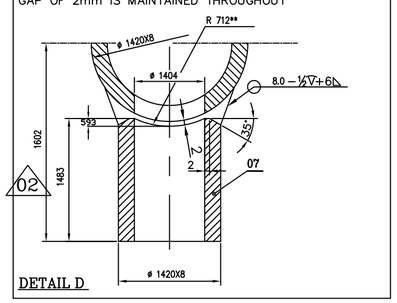

DETAIL D

** BRANCH PIPE SHALL BE CUT TO SUIT THE OUTER SURFACE OF THE MAIN PIPE SUCH THAT A UNIFORM GAP OF 2mm IS MAINTAINED THROUGHOUT

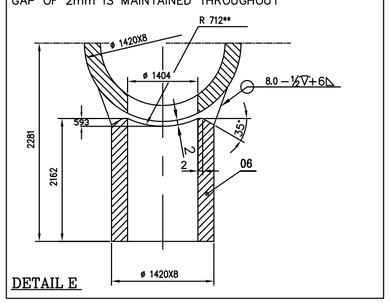

DETAIL E

	ITEM NO.	DESCRIPTION	DRAWING NO.	ITEM NO.	MATERIAL CODE	A/C	UNIT WT.
				VAR NO.	MATERIAL SPEC.		QTY.
	16	PAD PLATE 8mm; OD1300/ID1024	2-80-655-15993		---- / ASTM A 516 Gr.70	C	252 304 / 1
GKFDSC2Z040ZZZZZZ	15	GASKET JOB STD EXPANDED PTFE CORD 150# 7MM THK	2-80-655-15993		---- / ------	C	XX XXX / 04
---	14	NUT 5/8" UNC	2-80-655-15993		- / A194 GR.2H	C	0 033 / 576
---	13	BOLT STUD 5/8" UNC	2-80-655-15993		- / A193 GR.B7	C	0 224 / 288
FBFK521Z040ZZZZZZ	12	FLANGE.BLIND CL.150 FF 56"	2-80-655-16009	12	- / ASTM A 516 GR70	C	132 084 / 01
FBFK521Z040ZZZZZZ	11	FLANGE.SO CL.150 FF 56"	2-80-655-16008	12	ASTM A 516 GR70	C	52 089 / 05
	10	B16.11 1/2" HALF COUPLING CL6000	4-80-655-83151		- / SA105	C	0 180 / 01
WDMBX41Z0406305ZZ	09	PF 90DEG MITRE BEND OD1420X8	2-80-655-16010	11	------ / ASTM A 516 GR.70	C	953 709 / 01
P18Y713Z03263ZZZZ	08	P.F BRANCH PIPE OD1020X8 L=495	2-80-655-16047	14	------ / ASTM A 516 GR.70	C	98 760 / 01
02 PI8Y713Z04063ZZZZ	07	P.F BRANCH PIPE OD1420X8 L=1483	3-80-655-35562	07	------ / ASTM A 516 GR.70	C	412 948 / 01
PI8Y713Z04063ZZZZ	06	P.F PIPE BRANCH OD1420X8 L=2162	3-80-655-35562	06	------ / ASTM A 516 GR.70	C	602 020 / 01
PI8Y713Z04063ZZZZ	05	P.F PIPE OD1420X8 L=300	3-80-655-35562	05	------ / ASTM A 516 GR.70	C	83 536 / 01
02 PI8Y713Z04063ZZZZ	04	P.F PIPE OD1420X8 L=1364	3-80-655-35562	04	------ / ASTM A 516 GR.70	C	379 954 / 01
02 PI8Y713Z04063ZZZZ	03	P.F PIPE OD1420X8 L=2575	3-80-655-35562	03	------ / ASTM A 516 GR.70	C	717 290 / 01
PI8Y713Z04063ZZZZ	02	P.F PIPE OD1420X8 L=3350	3-80-655-35562	02	------ / ASTM A 516 GR.70	C	933 174 / 01
02 PI8Y713Z04063ZZZZ	01	P.F PIPE OD1420X8 L=5788	3-80-655-35562	01	------ / ASTM A 516 GR.70	C	1612 301 / 01

REV	DATE	ALTERED / APPROVED	M.P.K / TRINADH
02	29.05.19		
ZONE	DRAWING REVISED AS PER LATEST EIL DRAWING REVISION MARKED AS 02		
01	29.04.19		
ZONE	DRAWING REVISED AS PER MAIL FROM EIL DT: 24.04.19 REVISION MARKED AS 01		

N

CUSTOMER: INDIAN OIL CORPORATION LIMITED (HALDIA)

CONSULTANT: ENGINEERS INDIA LIMITED (EIL) NEW DELHI

NAME OF PROJECT: BS-VI, HALDIA

BHEL CUSTOMER NO: 7419

BHARAT HEAVY ELECTRICALS LTD., PIPING CENTRE, CHENNAI 600 017

	NAME	SIGN	DATE	NO OF ITEMS
DRN	S.RAJU	-sd-	15.03.19	
CHD	TRINADHA RAO	-sd-	15.03.19	
APPD	SESHAGIRI	-sd-	15.03.19	

DEPT.	GRADE OF UN TOL. DIM	SCALE	WEIGHT (Kg).	ITEM No.
CODE	C/M/F			

TITLE	EIL DRAWING NO:	CARD CODE	DRAWING No.	REV
56-AH-205-3301-K22A-IH-E		U 01	2-80-655-15993	02

SIZE A2

V: A2